PROMAT Engineering Sales Inc.

The Alloy Additive System Project

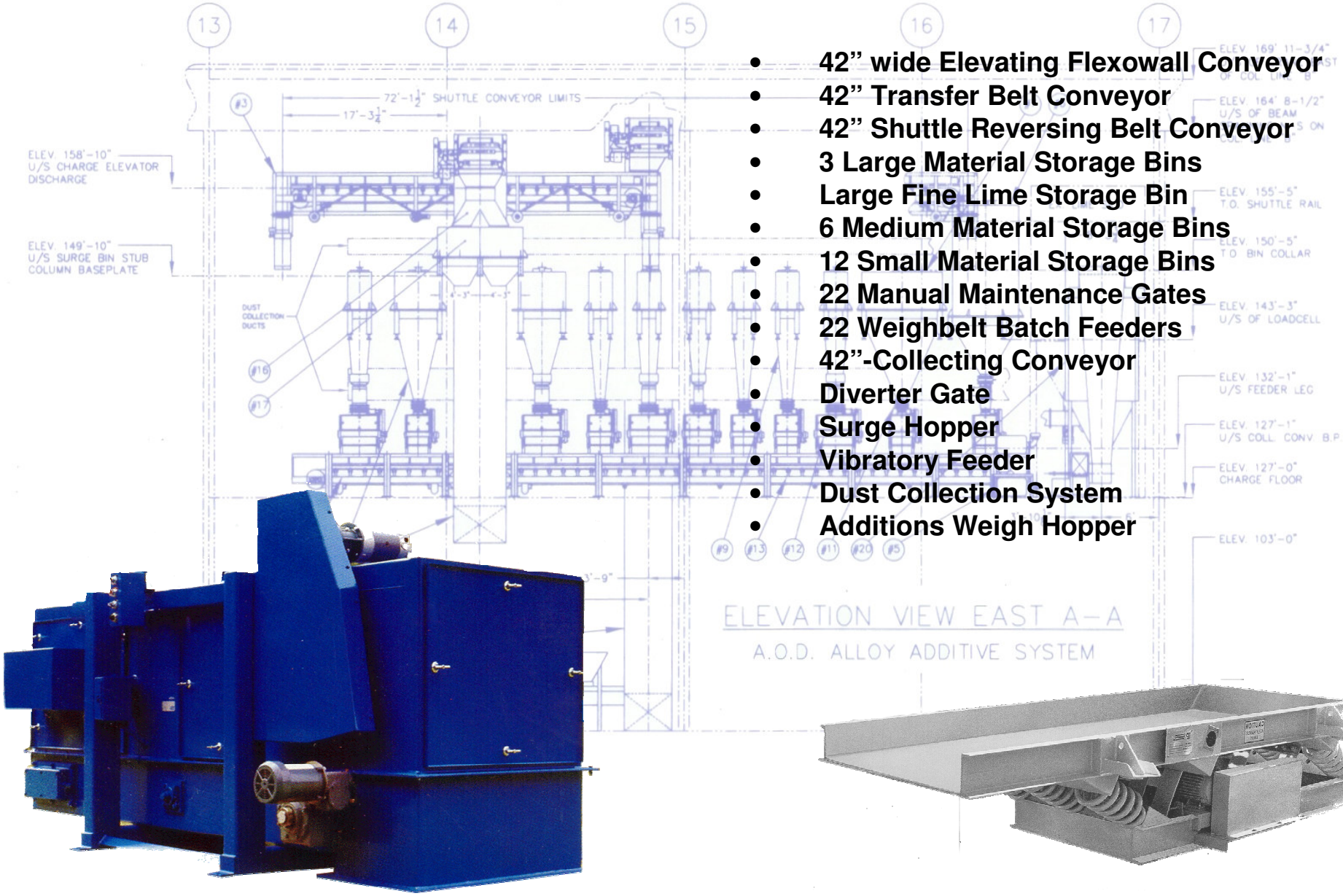

- 42” wide Elevating Flexowall Conveyor
- 42” Transfer Belt Conveyor
- 42” Shuttle Reversing Belt Conveyor
- 3 Large Material Storage Bins
- Large Fine Lime Storage Bin
- 6 Medium Material Storage Bins
- 12 Small Material Storage Bins
- 22 Manual Maintenance Gates
- 22 Weighbelt Batch Feeders
- 42”-Collecting Conveyor
- Diverter Gate
- Surge Hopper
- Vibratory Feeder
- Dust Collection System
- Additions Weigh Hopper

© PROMAT 2003